CeramTec

CeramTec North America Corporation

Isolator

SEMICONDUCTOR | ANALYTICAL EQUIPMENT | AEROSPACE | TELECOMMUNICATIONS

OIL EXPLORATION | R&D | HIGH ENERGY PHYSICS | MILITARY/DEFENSE | BIOTECHNOLOGY

Advanced Ceramic-to-Metal & Glass-Ceramic Sealing Technology

Description

Electrical isolators, sometimes referred to as 'breaks' or 'envelopes', consist of metal sleeves brazed to each end of an insulating ceramic tube. These assemblies provide electrical isolation of system components that operate within a common environment. They can also be used to act as a conduit to introduce gases or liquids into hermetic systems.

- Cryogenic isolators are used to introduce cryogenic fluids into a system and to provide electrical isolation of line components.
- Water isolators are used to introduce water or other fluids into a system and to provide electrical isolation of line components.
- Vacuum isolators are used to provide an electrical break between the vacuum system and other external components.

Standard Specifications

- Voltages up to 75 kV DC
- Temperature Range: -269˚C to 450˚C
- Internal IDs to 8 inches
- Internal Pressure 1 x 10^{-10} torr to 1000 psig

Extreme / Custom Design

- Voltages in excess of 180 kV
- Pressures to 10,000 psig
- Insulator IDs in excess of 15 inches
- Special fittings
- Radiation resistant
- Non-circular geometries
- Fluted configurations

Installation

Standard installation mountings include:

- Weld (Pulse-TIG, TIG, Laser, E-Beam)
- ISO KF flange
- ConFlat flange

Applications

A few of the many applications in which these isolators are commonly used are:

- Semiconductor processing equipment
- Particle accelerators
- Furnaces
- Analytical equipment
- Beam line tubes
- Aerospace
- Telecommunications

New Products

- Newly designed water isolators with higher pressure ratings
- Standard non-magnetic isolators

Typical Isolator Construction

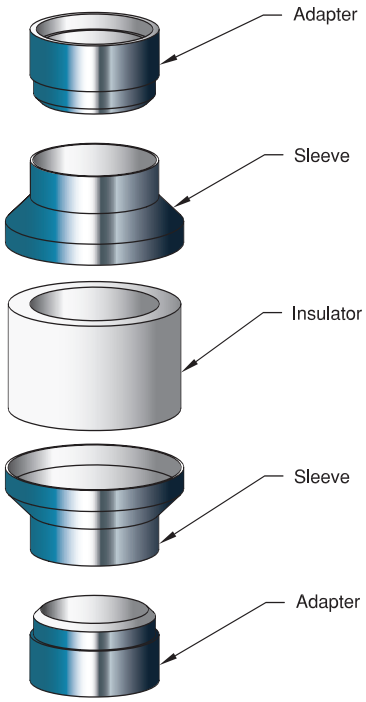

Type	Voltage DC	Pressure Rating (@ 20˚ C)	Temperature Range	Isolator ID (inches)	Sub-section	Section Pages
	to 13 kV	to 1000 psig	-269˚C to 450˚C	.11 to .41	Cryogenic	E.1 156-157
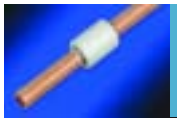	5 kV	to 450 psig	0˚C to 100˚C	.32 to .57	Water	E.2 158-159
	to 75 kV	to 900 psig	-269˚C to 450˚C	.31 to 8.0	Vacuum	E.3 160-167

Specifications

Materials

Tube:
- .11 ID: 321 Stainless steel
- .25 ID: 304 Stainless steel
- .41 ID: 304 Stainless steel

Cap: 42 Nickel iron
Insulation: Alumina ceramic
Magnetic Materials: Yes

Voltage Rating See table

Temperature Range -269°C to 450°C

Pressure @ 20°C See table

Cryogenic - ID: .11 [2.7]

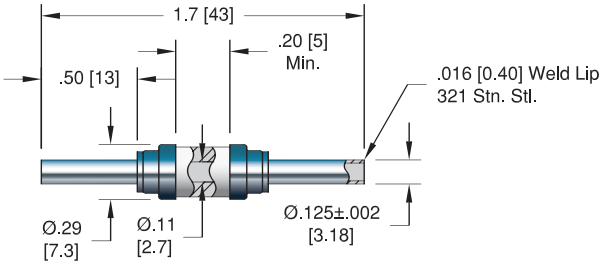

Cryogenic - ID: .25 [6.4]

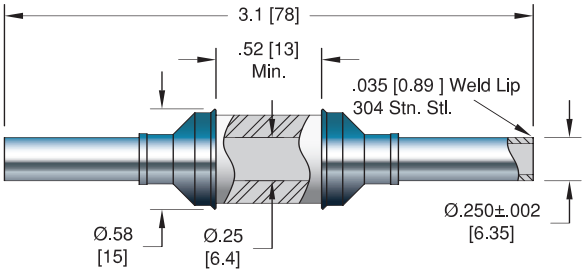

Cryogenic - ID: .25 [6.4]

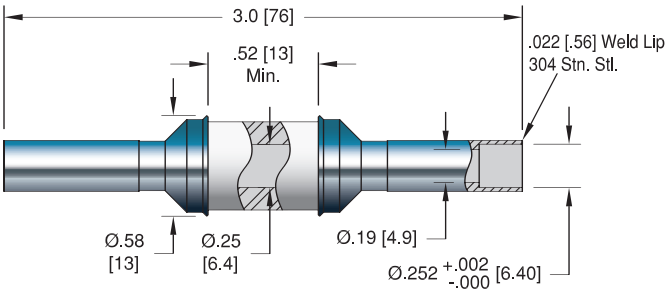

Cryogenic - ID: .41 [10]

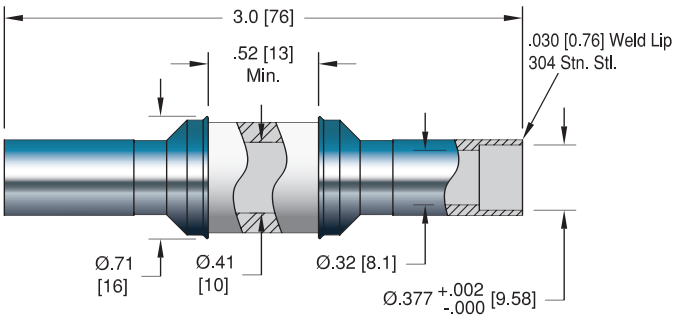

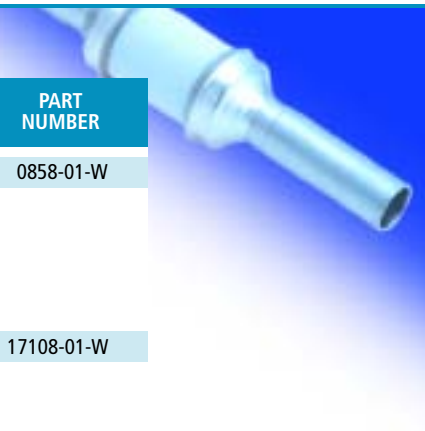

	VOLTAGE DC	INSTALLATION	PRESSURE PSIG	PRESSURE BAR	PART NUMBER
Cryogenic ID: .11 [2.7]	6 kV	Weld	1000	68	0858-01-W
Cryogenic ID: .25 [6.4]	13 kV	Weld	900	61	17108-01-W
Cryogenic ID: .25 [6.4]	13 kV	Weld	900	61	8002-01-W
Cryogenic ID: .41 [10]	13 kV	Weld	400	27	8002-02-W

Water - ID: .26 [8.1]

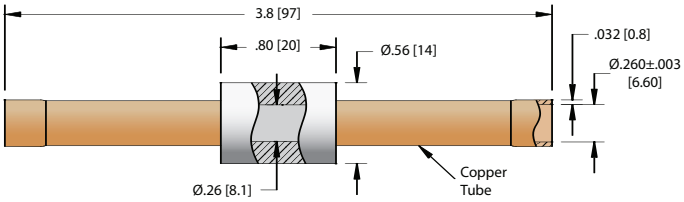

Water - ID: .38 [11]

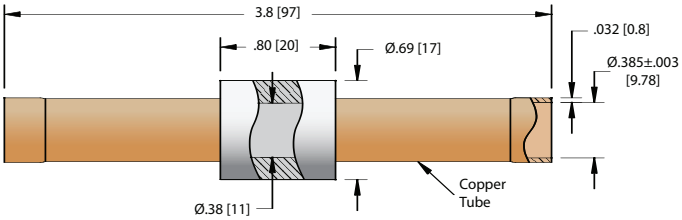

Water - ID: .51 [14]

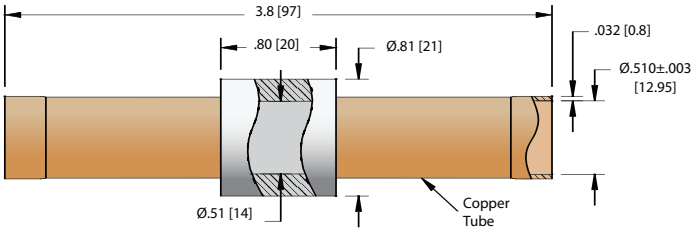

Specifications

Materials

Tube: Copper
Insulation: Alumina ceramic
Magnetic Materials: No

Voltage Rating 5 kV DC

Temperature Range 0°C to 100°C

Pressure @ 20°C See table

Water ID: .26 [8.1]	VOLTAGE DC	INSTALLATION	PRESSURE @ 20˚C PSIG	BAR	PART NUMBER
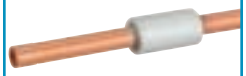	5 kV	Braze or Solder	450	30	17228-01-B
Water ID: .38 [11] 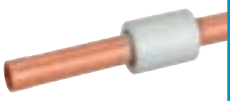	5 kV	Braze or Solder	300	20	17229-01-B
Water ID: .51 [14] 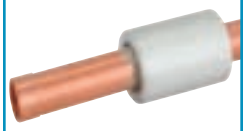	5 kV	Braze or Solder	200	13	17230-01-B

Insulator ID: .31 [7.9]

Weldable

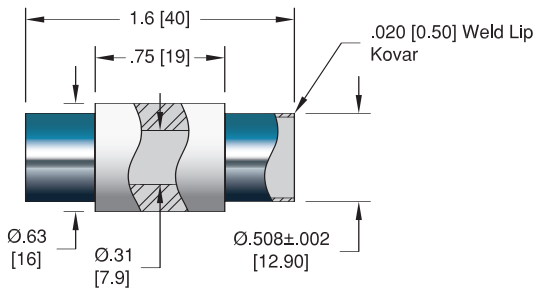

ISO KF

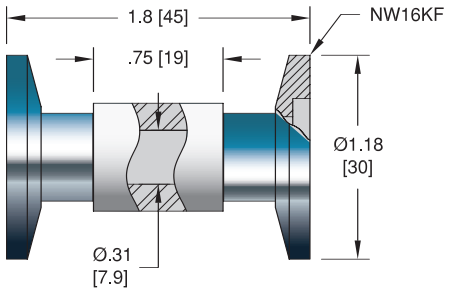

ConFlat

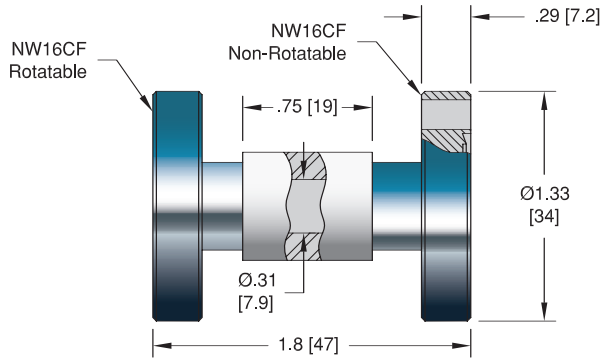

Insulator ID: .75 [19]

Weldable

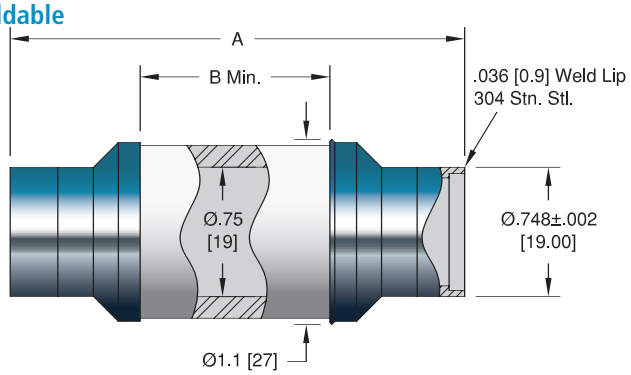

ISO KF

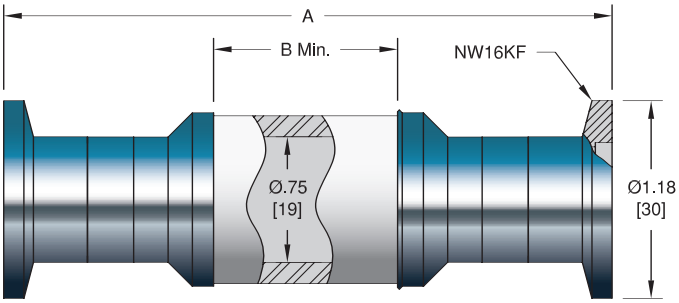

ConFlat

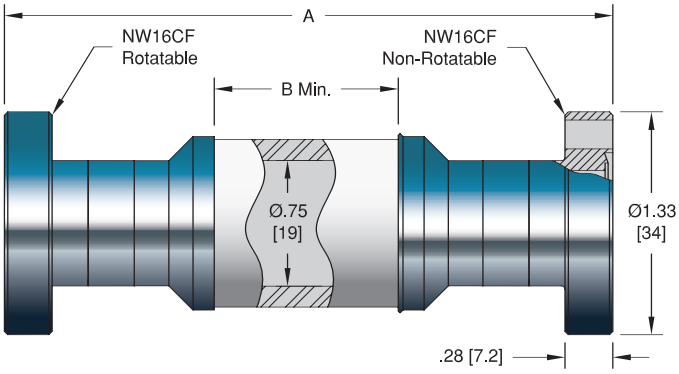

Specifications - Insulator ID: .31 [7.9]

Materials

Tube: Kovar
Insulation: Alumina ceramic
Magnetic Materials: Yes

Voltage Rating 15 kV DC

Temperature Range -55˚C to 450˚C, ISO KF -25˚C to 205˚C

Pressure @ 20°C See table

Specifications - Insulator ID: .75 [19]

Materials

Tube: Stainless steel
Insulation: Alumina ceramic
Magnetic Materials: See table

Voltage Rating See table

Temperature Range See table

Pressure @ 20°C See table

Weldable ID:.31 [7.9]

VOLTAGE DC	INSTALLATION	PRESSURE @ 20 °C PSIG	BAR	PART NUMBER
15 kV	Weld	900	61	9997-05-W

ISO KF ID:.31 [7.9]

	ISO FLANGE			
15 kV	NW16KF	-	-	17235-01-KF

ConFlat ID:.31 [7.9]

	CONFLAT FLANGE			
15 kV	1 1/3" (NW16CF)	900	61	4511-01-CF

Weldable ID:.75 [19]

VOLTAGE DC	INSTALLATION	DIMENSIONS A	B	PRESSURE @ 20 °C PSIG	BAR	TEMP °C MIN	MAX	MAGNETIC MATERIALS	PART NUMBER
6 kV	Weld	1.9 [48]	0.25 [6.3]	500	34	-55	450	Yes	9998-04-W
20 kV	Weld	2.6 [67]	1.0 [25]	500	34	-55	450	Yes	9998-01-W
35 kV	Weld	3.6 [92]	2.0 [51]	500	34	-55	450	Yes	9998-03-W
6 kV	Weld	1.9 [48]	0.25 [6.3]	350	24	-269	450	No	9998-06-W
20 kV	Weld	2.6 [67]	1.0 [25]	350	24	-269	450	No	9998-07-W
35 kV	Weld	3.6 [92]	2.0 [51]	350	24	-269	450	No	9998-08-W

ISO KF ID:.75 [19]

	ISO FLANGE								
6 kV	NW16KF	2.9 [73]	0.25 [6.3]	-	-	-25	205	Yes	17236-01-KF
20 kV	NW16KF	3.6 [92]	1.0 [25]	-	-	-25	205	Yes	17236-02-KF
35 kV	NW16KF	4.6 [118]	2.0 [51]	-	-	-25	205	Yes	17236-03-KF
6 kV	NW16KF	2.9 [73]	0.25 [6.3]	-	-	-25	205	No	17236-04-KF
20 kV	NW16KF	3.6 [92]	1.0 [25]	-	-	-25	205	No	17236-05-KF
35 kV	NW16KF	4.6 [118]	2.0 [51]	-	-	-25	205	No	17236-06-KF

ConFlat ID:.75 [19]

	CONFLAT FLANGE								
6 kV	1 1/3" (NW16CF)	2.9 [73]	0.25 [6.3]	500	34	-55	450	Yes	8000-04-CF
20 kV	1 1/3" (NW16CF)	3.6 [92]	1.0 [25]	500	34	-55	450	Yes	8000-02-CF
35 kV	1 1/3" (NW16CF)	4.6 [118]	2.0 [51]	500	34	-55	450	Yes	8000-03-CF
6 kV	1 1/3" (NW16CF)	2.9 [73]	0.25 [6.3]	350	24	-269	450	No	8000-06-CF
20 kV	1 1/3" (NW16CF)	3.6 [92]	1.0 [25]	350	24	-269	450	No	8000-07-CF
35 kV	1 1/3" (NW16CF)	4.6 [118]	2.0 [51]	350	24	-269	450	No	8000-08-CF

Insulator ID: .90 [23]

Weldable

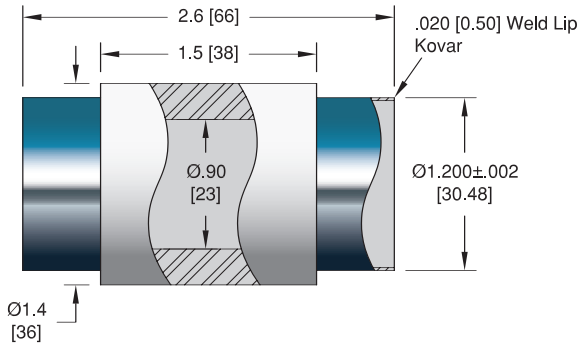

ISO KF

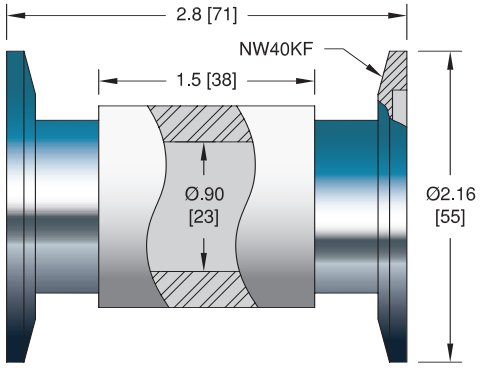

ConFlat

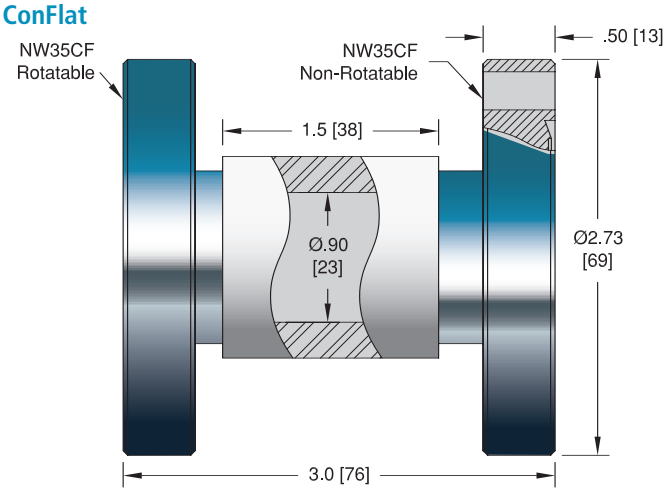

Insulator ID: 1.3 [32]

Weldable

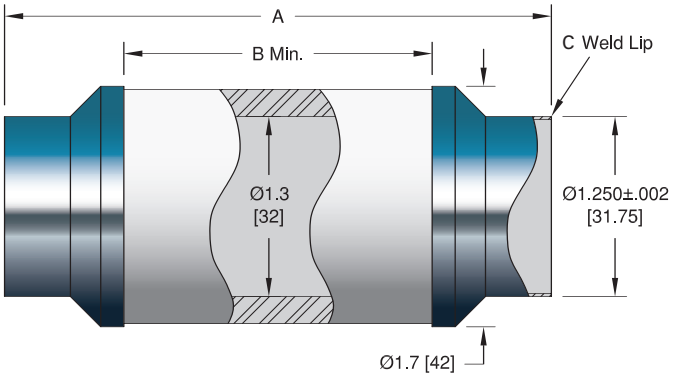

ISO KF

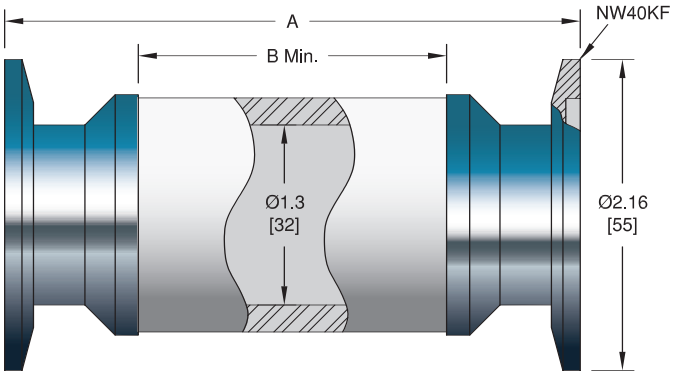

ConFlat

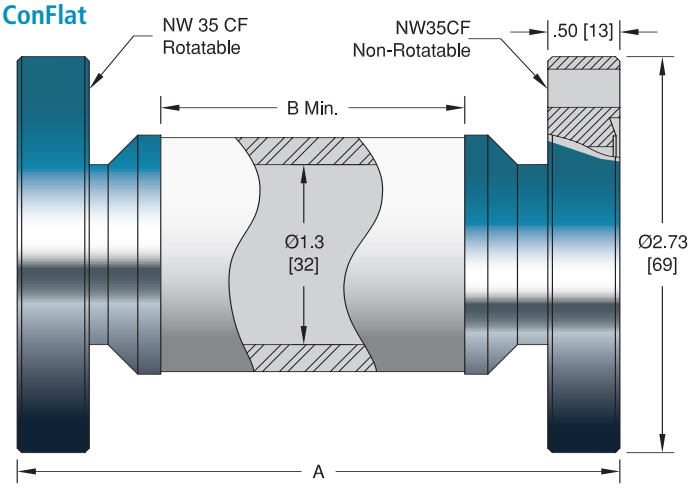

Specifications - Insulator ID: .90 [23]

Materials

Tube: Kovar
Insulation: Alumina ceramic
Magnetic Materials: Yes

Voltage Rating 30 kV DC

Temperature Range -55˚C to 450˚C, ISO KF -25˚C to 205˚C

Pressure @ 20°C See table

Specifications - Insulator ID: 1.3 [32]

Materials

Tube: Kovar or 304 stainless steel
Insulation: Alumina ceramic
Magnetic Materials: See table

Voltage Rating See table

Temperature Range See table

Pressure @ 20°C See table

Weldable ID: .90 [23]

VOLTAGE DC	INSTALLATION	PRESSURE @ 20 °C PSIG	BAR	PART NUMBER
30 kV	Weld	360	24	9997-09-W

ISO KF ID: .90 [23]

ISO FLANGE

30 kV	NW40KF	-	-	17237-01-KF

ConFlat ID: .90 [23]

CONFLAT FLANGE

30 kV	2 3/4" (NW35CF)	360	24	4511-02-CF

Weldable ID: 1.3 [32]

VOLTAGE DC	INSTALLATION	DIMENSIONS A	B	C	PRESSURE @ 20 °C PSIG	BAR	TEMP °C MIN	MAX	MAGNETIC MATERIALS	PART NUMBER
5 kV	Weld	1.9 [49]	0.6 [4.0]	.020 [0.50] Kovar	350	24	-55	450	Yes	9999-03-W
35 kV	Weld	3.8 [96]	2.0 [50]	.020 [0.50] Kovar	350	24	-55	450	Yes	9999-01-W
65 kV	Weld	5.7 [144]	3.9 [99]	.020 [0.50] Kovar	350	24	-55	450	Yes	9999-04-W
5 kV	Weld	1.9 [49]	0.6 [4.0]	.035 [0.90] Stn.Stl.	250	17	-269	450	No	17199-01-W
35 kV	Weld	3.8 [96]	2.0 [50]	.035 [0.90] Stn.Stl.	250	17	-269	450	No	17199-02-W
65 kV	Weld	5.7 [144]	3.9 [99]	.035 [0.90] Stn.Stl.	250	17	-269	450	No	17199-03-W

ISO KF ID: 1.3 [32]

ISO FLANGE

5 kV	NW40KF	2.1 [54]	0.16 [4.0]	-	-	-	-25	205	Yes	17238-01-KF
35 kV	NW40KF	4.0 [101]	2.0 [50]	-	-	-	-25	205	Yes	17238-02-KF
65 kV	NW40KF	5.9 [149]	3.9 [99]	-	-	-	-25	205	Yes	17238-03-KF
5 kV	NW40KF	2.1 [54]	0.16 [4.0]	-	-	-	-25	205	No	17238-04-KF
35 kV	NW40KF	4.0 [101]	2.0 [50]	-	-	-	-25	205	No	17238-05-KF
65 kV	NW40KF	5.9 [149]	3.9 [99]	-	-	-	-25	205	No	17238-06-KF

ConFlat ID: 1.3 [32]

CONFLAT FLANGE

5 kV	2 3/4"(NW35CF)	2.3 [59]	0.16 [4.0]	-	350	24	-55	450	Yes	8001-03-CF
35 kV	2 3/4"(NW35CF)	4.2 [107]	2.0 [50]	-	350	24	-55	450	Yes	8001-02-CF
65 kV	2 3/4"(NW35CF)	6.1 [155]	3.9 [99]	-	350	24	-55	450	Yes	8001-04-CF
5 kV	2 3/4"(NW35CF)	2.3 [59]	0.16 [4.0]	-	250	17	-269	450	No	8001-06-CF
35 kV	2 3/4"(NW35CF)	4.2 [107]	2.0 [50]	-	250	17	-269	450	No	8001-07-CF
65 kV	2 3/4"(NW35CF)	6.1 [155]	3.9 [99]	-	250	17	-269	450	No	8001-08-CF

Insulator ID: 2.0 [51]

Weldable

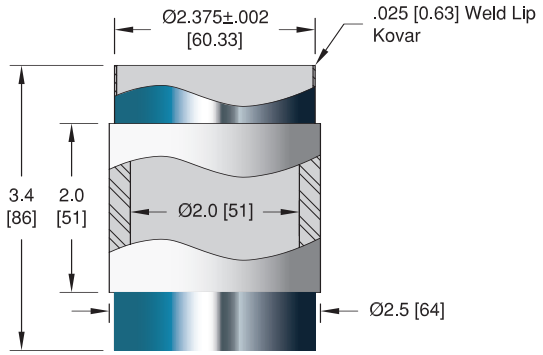

ConFlat

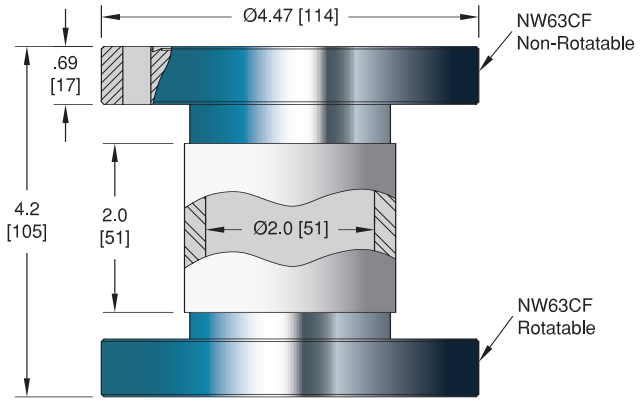

Insulator ID: 2.5 [64]

Weldable

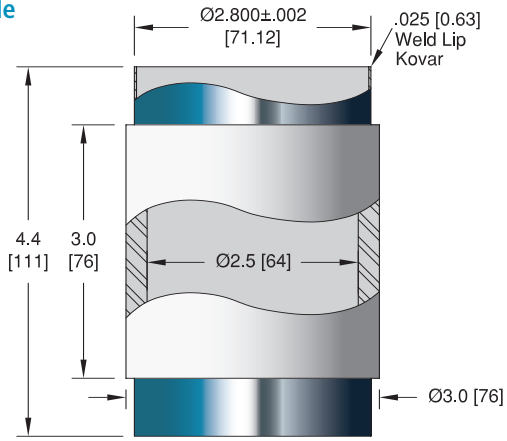

ConFlat

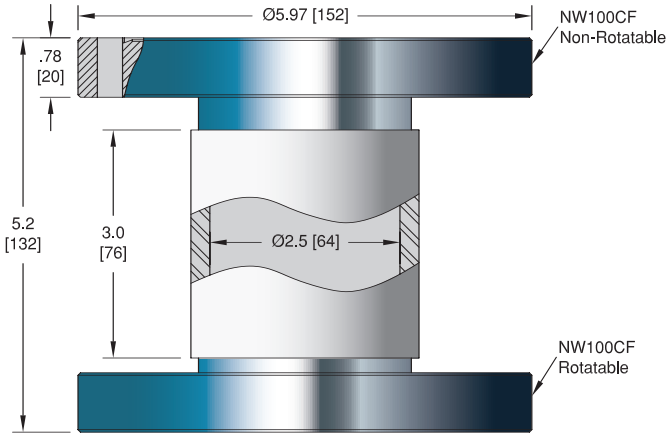

Weldable

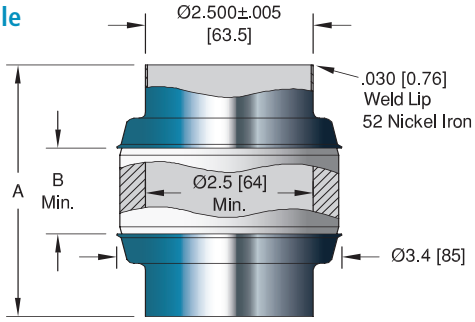

ConFlat

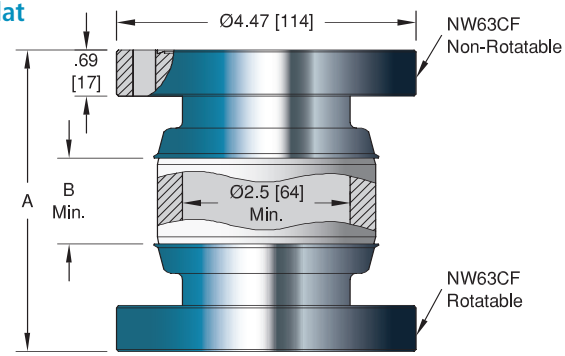

Specifications - Insulator ID: 2.0 [51]

Materials

Tube: Kovar
Insulation: Alumina ceramic
Magnetic Materials: Yes

Voltage Rating 40 kV DC

Temperature Range -55°C to 450°C

Pressure @ 20°C 180 PSIG (12 Bar)

Specifications - Insulator ID: 2.5 [64]

Materials

Tube: Kovar or 52 Nickel iron
Insulation: Alumina ceramic
Magnetic Materials: Yes

Voltage Rating See table

Temperature Range See table

Pressure @ 20°C See table

Weldable ID: 2.0 [51]

VOLTAGE DC	INSTALLATION	PART NUMBER
40 kV	Weld	9997-21-W

ConFlat ID: 2.0 [51]

	CONFLAT FLANGE	
40 kV	4 1/2" (NW63CF)	4511-03-CF

Weldable ID: 2.5 [64]

VOLTAGE DC	INSTALLATION	PRESSURE @ 20 °C PSIG	BAR	TEMP °C MIN	MAX	PART NUMBER
60 kV	Weld	150	10	-55	450	9997-25-W

ConFlat ID: 2.5 [64]

	CONFLAT FLANGE					
60 kV	6" (NW100CF)	150	10	-55	450	4511-05-CF

Weldable ID: 2.5 [64]

VOLTAGE DC	INSTALLATION	DIMENSIONS A	B	PRESSURE @ 20 °C PSIG	BAR	TEMP °C MIN	MAX	PART NUMBER
20 kV	Weld	3.7 [95]	0.90 [22.8]	80	5	-269	450	17140-01-W
60 kV	Weld	6.5 [165]	3.65 [92.7]	80	5	-269	450	17140-02-W

ConFlat ID: 2.5 [64]

	CONFLAT FLANGE							
20 kV	4 1/2" (NW63CF)	4.5 [114]	0.90 [22.8]	80	5	-269	450	17144-01-CF
60 kV	4 1/2" (NW63CF)	7.3 [184]	3.65 [92.7]	80	5	-269	450	17144-02-CF

Insulator ID: 4.0 [102]
Weldable

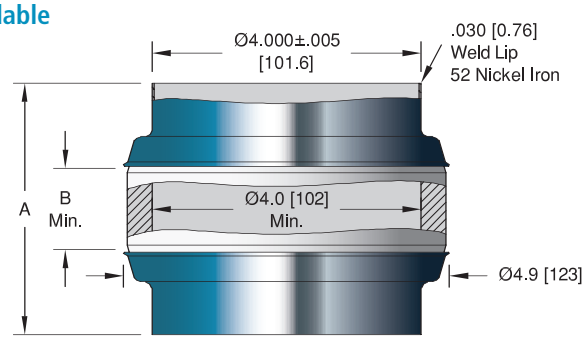

ConFlat

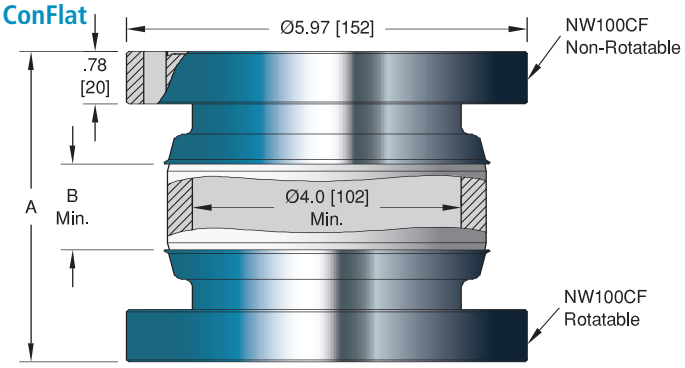

Insulator ID: 6.0 [152]
Weldable

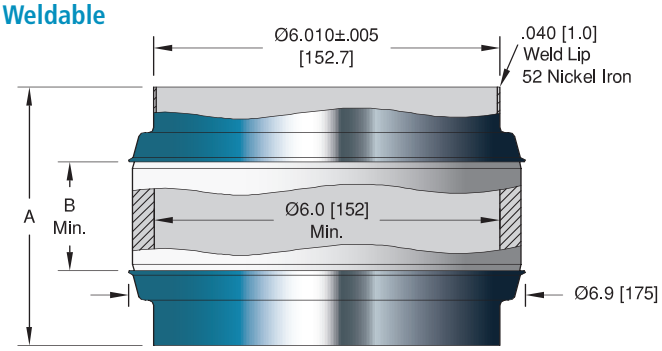

ConFlat

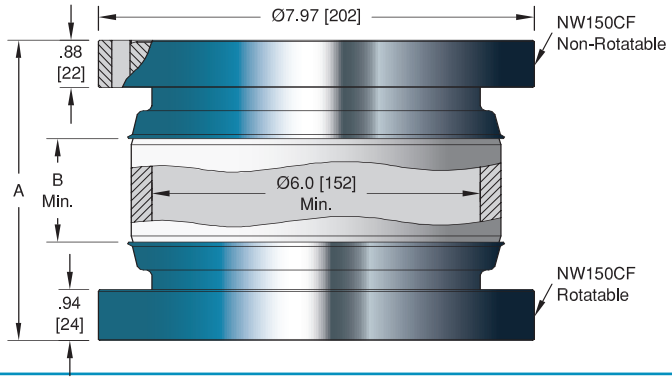

Specifications
Materials

Tube: 52 Nickel iron
Insulation: Alumina ceramic
Magnetic Materials: Yes

Voltage Rating See table

Temperature Range -269°C to 450°C

Pressure @ 20°C

Insulator ID: 4.0 [102] – 60 PSIG (4 Bar)
Insulator ID: 6.0 [152] – 40 PSIG (2.7 Bar)
Insulator ID: 8.0 [203] – 30 PSIG (2 Bar)

Insulator ID: 8.0 [203]
Weldable

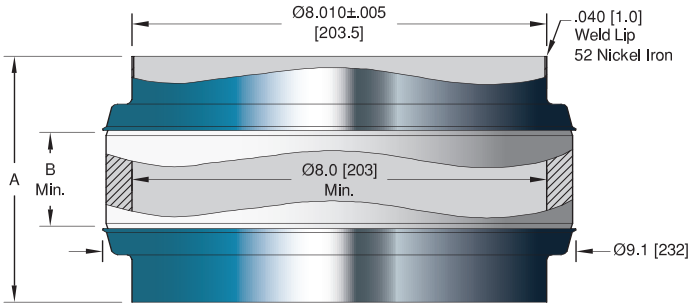

ConFlat

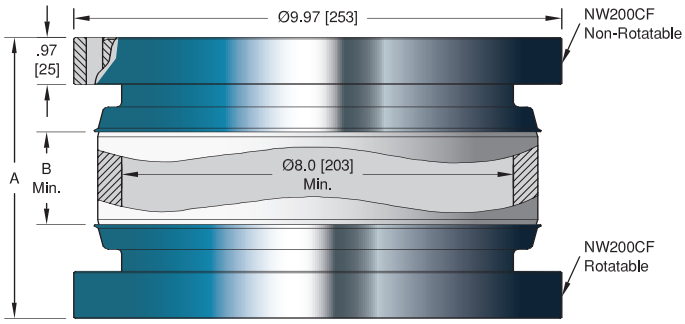

Weldable ID: 4.0 [102]

VOLTAGE DC	INSTALLATION	DIMENSIONS A	DIMENSIONS B	PART NUMBER
20 kV	Weld	3.7 [95]	0.90 [22.8]	17141-01-W
60 kV	Weld	6.5 [165]	3.65 [92.7]	17141-02-W

ConFlat ID: 4.0 [102]

	CONFLAT FLANGE			
20 kV	6″ (NW100CF)	4.6 [117]	0.90 [22.8]	17145-01-CF
60 kV	6″ (NW100CF)	7.4 [187]	3.65 [92.7]	17145-02-CF

Weldable ID: 6.0 [152]

VOLTAGE DC	INSTALLATION	DIMENSIONS A	DIMENSIONS B	PART NUMBER
30 kV	Weld	4.5 [114]	1.5 [38]	17142-01-W
55 kV	Weld	6.0 [152]	3.0 [76]	17142-02-W
75 kV	Weld	7.5 [191]	4.5 [114]	17142-03-W

ConFlat ID: 6.0 [152]

	CONFLAT FLANGE			
30 kV	8″ (NW150CF)	5.5 [140]	1.5 [38]	17146-01-CF
55 kV	8″ (NW150CF)	7.0 [178]	3.0 [76]	17146-02-CF
75 kV	8″ (NW150CF)	8.5 [216]	4.5 [114]	17146-03-CF

Weldable ID: 8.0 [203]

VOLTAGE DC	INSTALLATION	DIMENSIONS A	DIMENSIONS B	PART NUMBER
30 kV	Weld	4.75 [121]	1.5 [38]	17143-01-W
55 kV	Weld	6.25 [159]	3.0 [76]	17143-02-W
75 kV	Weld	7.75 [197]	4.5 [114]	17143-03-W

ConFlat ID: 8.0 [203]

	CONFLAT FLANGE			
30 kV	10″ (NW200CF)	5.8 [146]	1.5 [38]	17147-01-CF
55 kV	10″ (NW200CF)	7.3 [184]	3.0 [76]	17147-02-CF
75 kV	10″ (NW200CF)	8.8 [222]	4.5 [114]	17147-03-CF